Features

No revision without agency approval.

To view or download the latest technical information about this product, including specifications, dimensions, accessories, and wiring, go to www.bannerengineering.com.



- Designed for use with approved amplifiers and intrinsically safe barriers in explosive environments
- NAMUR compliant sensor with the rugged design and exceptional optical performance of Q45 series sensors
- Output passes ≤ 1.2 mA in the “dark” condition and ≥ 2.1 mA in the “light” condition
- Internal multi-turn SENSITIVITY (Gain) control accessible beneath hinged, o-ring sealed top cover
- Models are available with an integral cable or a quick-disconnect connector
- Supply voltage: 5 to 15 V DC

WARNING:

- **Do not use this device for personnel protection**
- Using this device for personnel protection could result in serious injury or death.
- This device does not include the self-checking redundant circuitry necessary to allow its use in personnel safety applications. A device failure or malfunction can cause either an energized (on) or de-energized (off) output condition.

Models

Standard 2 m (6.5 ft) cable models are listed. To order the 9 m (30 ft) cable model, add suffix "W/30" to the cabled model number (Q459E W/30). Models with a QD connector require a mating cable (see Accessories list).

Opposed Models - Emitter (E) and Receiver (R)

Models	Cable	Performance	Output Type
Q459E	2 m (6.5 ft)	880 nm, infrared Range: 6 meters (20 feet)	Constant current ≤ 1.2 mA dark ≥ 2.1 mA light
Q459EQ	4-pin M12 QD		
Q45AD9R	2 m (6.5 ft)		
Q45AD9RQ	4-pin M12 QD		

Retroreflective Models

Retroreflective range is specified using one model BRT-3 P retroreflector (3-inch diameter). Actual sensing range may be more or less than specified, depending upon the efficiency and reflective area of the retroreflector(s) in use.

Non-Polarized Models	Cable	Performance	Output Type
Q45AD9LV	2 m (6.5 ft)	680 nm, visible red Range: 9 m (30 ft)	Constant Current ≤ 1.2 mA dark ≥ 2.1 mA light
Q45AD9LVQ	4-pin M12 QD		

Polarized Models	Cable	Performance	Output Type
Q45AD9LP	2 m (6.5 ft)	680 nm, visible red Range: 6 m (20 ft)	Constant Current ≤ 1.2 mA dark ≥ 2.1 mA light
Q45AD9LPQ	4-pin M12 QD		

Diffuse Models

Performance curves are based on a 90% reflectance white test card.

Short Range Models	Cable	Performance	Output Type
Q45AD9D	2 m (6.5 ft)	880 nm, infrared Range: 300 mm (12 in)	Constant Current ≤ 1.2 mA dark ≥ 2.1 mA light
Q45AD9DQ	4-pin M12 QD		

Original Instructions
09-Jul-26

© Banner Engineering Corp. All rights reserved.
www.bannerengineering.com

38343
p/n: 38343 Rev. O

ПРОМЭЛЕКТРОНИКА/ sales@prom-elec.com

Long Range Models	Cable	Performance	Output Type
Q45AD9DL	2 m (6.5 ft)	880 nm, infrared Range: 1 m (40 in)	Constant Current ≤ 1.2 mA dark ≥ 2.1 mA light
Q45AD9DLQ	4-pin M12 QD		

Convergent Models

Convergent mode models operate at 680 nm, visible red. Performance curves are based on a 90% reflectance white test card.

Models	Cable	Focus	Output Type
Q45AD9CV	2 m (6.5 ft)	38 mm (1.5 in) Spot size at focus: 1.3 mm (0.05 in)	Constant Current ≤ 1.2 mA dark ≥ 2.1 mA light
Q45AD9CV4	2 m (6.5 ft)	100 mm (4 in) Spot size at focus: 1.5 mm (0.06 in)	Constant Current ≤ 1.2 mA dark ≥ 2.1 mA light
Q45AD9CV4Q	4-pin M12 QD		

The following models are no longer available for order but are still covered by the information in this document.

- Q45AD9CVQ

Plastic Fiber Optic Models

Performance curves are based on a 90% reflectance white test card.

Models	Cable	Performance	Output Type
Q45AD9FP	2 m (6.5 ft)	660 nm, visible red Range: varies by sensing mode and fiber optics used	Constant Current ≤ 1.2 mA dark ≥ 2.1 mA light
Q45AD9FPQ	4-pin M12 QD		

Glass Fiber Optic Models

Performance curves are based on a 90% reflectance white test card.

Models	Cable	Performance	Output Type
Q45AD9F	2 m (6.5 ft)	880 nm, infrared Range: varies by sensing mode and fiber optics used	Constant Current ≤ 1.2 mA dark ≥ 2.1 mA light
Q45AD9FQ	4-pin M12 QD		

Models	Cable	Performance	Output Type
Q45AD9FV	2 m (6.5 ft)	650 nm, visible red Range: varies by sensing mode and fiber optics used	Constant Current ≤ 1.2 mA dark ≥ 2.1 mA light
Q45AD9FVQ	4-pin M12 QD		

Overview

The Q45AD9 Series NAMUR Sensor is a rugged, self-contained two-wire sensor designed for use with certified intrinsically safe switching amplifiers and barriers (Approved Apparatus) with intrinsically safe circuits.

The Q45AD9 Series NAMUR sensor is designed in accordance with DIN 19234 (IEC/EN 60947-5-6) for operation via two-wire connection to an Approved Apparatus controlled by the variable internal resistance of the sensor.

The sensor varies the impedance across the sensor output, which passes 1 mA or less in the "dark" condition and 2 mA or more in the "light" condition. A highly visible red LED indicator is located beneath a raised transparent dome on top of the sensor.

- SIGNAL—LED lights red when the sensor sees its modulated light source
- POWER (Emitters only)—LED lights red when 5 to 15 V DC power is applied

Multi-turn sensitivity control on top of sensor, beneath a transparent cover, allows precise sensitivity setting (turn clockwise to increase gain).

Models are available with either a 2 m (6.5 ft) or 9 m (30 ft) long attached PVC-covered cable, or a 4-pin M12 quick disconnect (QD) connector. Quick disconnect models (with Q in the model number suffix) use MQD9-4.. mating cable (either straight or right-angle connector; see "Accessories" on page 9). Contact Banner Engineering for the availability of sensor models with 9 m (30 ft) long attached cable.

© Banner Engineering Corp. All rights reserved.
www.bannerengineering.com

Installation Instructions

Q45AD9 Ex/HazLoc Applications

WARNING:
- **Explosive Atmospheres/Hazardous Locations**
- It is the user's responsibility to ensure that all local, state, and national laws, rules, codes, or regulations relating to the installation and use of this device in any particular application are satisfied. This device must be installed by a Qualified Person[1], in accordance with this document and applicable regulations.

WARNING:
- **Explosion Hazard**
- Do not disconnect equipment unless the power has been switched off or the area is known to be non-hazardous.

WARNING:
- **Electrostatic Discharge (ESD) Specific Conditions for Safe Use**
- Parts of the enclosure are non-conducting and can generate an ignition-capable level of ESD.
- To reduce the risk of ignition due to electrostatic discharge, avoid contact with the equipment while an explosive atmosphere is present.
- Clean the equipment with only a damp cloth.

Specific Conditions for Use and General Notes:
- See Specifications and Wiring Diagrams for important information concerning entity parameters, permissible locations, electrical connections and certifications.
- In addition to the warning above concerning user responsibility, the installation must comply with the following:
  - All installations must comply with all manufacturer's instructions.
  - U.S. Installations: The relevant requirements of the National Electrical Code® (ANSI/NFPA-70 (NEC®) and when appropriate ANSI/ISA-RP12.06.01 Installation of Intrinsically Safe Systems for Hazardous (Classified) Locations.
  - Canadian Installations: The relevant requirements of the Canadian Electrical Code (CSA C22.1).
  - ATEX and IECEx Installations: The relevant requirements of EN IEC 60079-14 and applicable National regulations.
  - For quick disconnect (QD) models only: Use Banner **MQD9-4##** cordsets (see "Quick-Disconnect (QD) Cables" on page 9), or suitable M12 quick disconnect cordsets with threaded retaining nut (see Specifications), The cordset must be securely fastened using the M12x1 QD retaining nut to prevent disconnection. Maximum connector torque: 6 ft-lbs.
- Do not attempt any repairs to this device; it contains no field-replaceable parts or components. Tampering and/or replacement with non-factory components may adversely affect the safe use of the system.
- Approved Apparatus entity parameters must meet the following requirements:
  - V_{oc} or $V_t \leq V_{max}$
  - $C_a \geq C_i + C_{cable}$
  - I_{sc} or $I_t \leq I_{max}$
  - $La \geq L_i + L_{cable}$
- Sensor Entity Parameters:
  - V_{max} (Ui) ≤ 15 V dc
  - I_{max} (Ii) ≤ 60 mA
  - $P_i \leq 225$ mW
  - $C_i = 0.3$ µF
  - $L_i = 0$ mH
- Cable Entity Parameters (if unknown):
  - $C_{cable} = 60$ pF/ft
  - $L_{cable} = 0.2$ µH/ft
- The ambient operating temperature range of the Sensors is –40 °C to +70 °C (–40 °F to +158 °F).
- For U.S. installations, Class II and III, Division 2 applies only to model numbers ending in a Q suffix.
- For intrinsically safe installations, sensors must be used with certified intrinsically safe switching amplifiers and barriers (Approved Apparatus) with intrinsically safe circuits that limit supply voltage and current in the event of failures.
- Associated Apparatus is not required for installation of the devices within a Division 2 hazardous (classified) location when installed per the National Electrical Code. The maximum voltage for Division 2 installation is 15 V DC. In Division 2 installations (without Associated Apparatus), observe Explosion Hazard warning at the beginning of this section.
- Associated Apparatus is not required for installation of the devices within a Division 2 hazardous (classified) location when installed in, or through the wall of a suitable enclosure with provision for connection of rigid metal conduit per the Canadian Electrical Code,

[1] A Qualified Person is a person who, by possession of a recognized degree or certificate of professional training, or who, by extensive knowledge, training and experience, has successfully demonstrated the ability to solve problems relating to the subject matter and work.

© Banner Engineering Corp. All rights reserved.
www.bannerengineering.com

as acceptable to the local inspection authority having jurisdiction. The maximum rating for Division 2 installation is 15V dc, 60 mA. In Division 2 installations (without Associated Apparatus), observe Explosion Hazard warning at the beginning of this section.
- Maximum non-hazardous area voltage that the Approved Apparatus (intrinsically safe circuit) is connected to must not exceed 250 V.
- Intrinsic safety ground, if required for the Associated Apparatus, shall be less than 1 ohm.

Q45AD9 Wiring Connections

Q45AD9 Series NUMAR sensors are intrinsically safe ONLY when used with certified intrinsically safe switching amplifiers and barriers (Approved Apparatus) with intrinsically safe circuits. Banner does not manufacture such devices; however, our applications engineers can refer you to suppliers of certified devices that will interface with Banner sensors.

The user is responsible for proper installation and maintenance of this equipment and must conform with the certification requirements relating to barriers and to maximum allowable capacitance and inductance of the field wiring. If in doubt about these requirements, our applications engineers can refer you to the appropriate authority.

NAMUR sensors with an attached cable

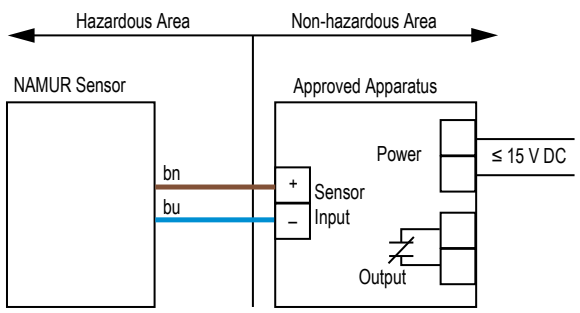

NAMUR sensors with a quick-disconnect

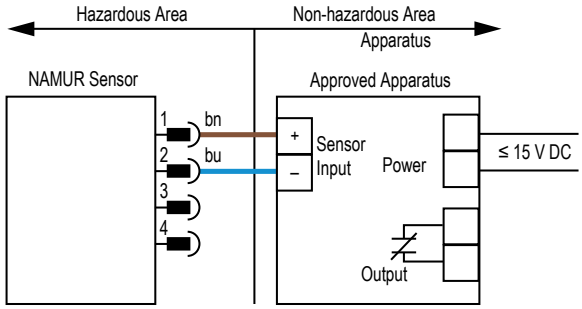

4-pin M12 male pinout

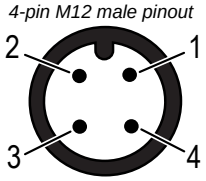

1. Brown
2. Blue
3. Not used
4. Not used

Hydrocarbon Leak Detectors and Water Leak Detection (FM7745 Approval)

Models: **Q45AD9F(Q)** and **BTxxxSM900** Glass Fiber

Performance is compliant as a Hydrocarbon Leak Detector and as a Water Leak Detector when used with BTxxxSM900 glass fiber optic accessory.

Application Notes:
- The installation must comply with all installation instructions contained in this document.
- The liquid to be detected must have an index of refraction different from that of air (i.e., typically not clear or colorless).
- The liquid to be detected must be non-viscous (so that it does not cling to the probe tip) for the optical principle of the probe to function correctly.
- The probe must be mounted a minimum of 50 mm (2 in) from a light-colored (e.g., white) or shiny (e.g., stainless steel) background to prevent false proxing in the presence of the fluid.
- The Q45AD9F(Q) gain adjustment must be used to set the excess gain to an acceptable level to ensure that the amount of internal probe reflection will reliably drop below the threshold level when fluid is present.
- When the sensor is configured correctly, the liquid contacting the tip causes the Q45 LED light to scatter into the liquid. This allows sensor to detect the liquid and cause a “dark” condition.
- Scheduled maintenance must include inspecting and cleaning the probe tip to prevent contamination (e.g. dust) from building up on the probe tip. If any damage to the probe tip or the fiber optic cable is found, the damaged item must be immediately replaced.

Specifications

Supply Voltage and Current

5 to 15 V DC; Supply voltage is provided by the amplifier to which the sensor is connected.

Adjustments

Multi-turn sensitivity control on top of sensor, beneath a transparent o-ring sealed cover, allows precise sensitivity setting (turn clockwise to increase gain).

© Banner Engineering Corp. All rights reserved.
www.bannerengineering.com

Output

Constant current output: ≤ 1.2 mA in the “dark” condition and ≥ 2.1 mA in the “light” condition

Output Response Time

Opposed mode receiver: 2 milliseconds on/0.4 milliseconds off. All others 5 milliseconds on/off (does not include amplifier response)

Construction

Molded thermoplastic polyester housing, o-ring sealed transparent Lexan® top cover, molded acrylic lenses, and stainless steel hardware. Q45s are designed to withstand 1200 psi washdown. The base of cabled models has a 1/2-inch NPS integral internal conduit thread. [(2)]

Environmental Rating

Banner tested to NEMA 6P, IEC IP67

Application Note

Special Conditions for Safe Use: Parts of the enclosure are non-conducting and may generate an ignition-capable level of ESD. Cleaning of the equipment must be done only with a damp cloth.

Indicators

Indicator LEDs are highly visible, located beneath a raised transparent dome on top of the sensor.

POWER (red) LED (emitters only) lights whenever 5 to 15 V DC power is applied

SIGNAL (red) LED lights whenever the sensor sees its modulated light source

[(2)] Lexan® is a registered trademark of General Electric Co.

Operating Conditions

Temperature: –40 °C to +70 °C (–40 °F to +158 °F)

Maximum relative humidity: 90% at 50 °C (non-condensing)

Connections

PVC-jacketed 2 m (6.5 ft) or 9 m (30 ft) cables, or 4-pin M12 quick-disconnect (QD) fitting are available. QD cables are ordered separately. See "Quick-Disconnect (QD) Cables" on page 9.

Connecting 4-pin M12 QD Cordsets (see "Quick-Disconnect (QD) Cables" on page 9): Female single-ended Multiconductor cable (at minimum): UL Style 2517, 24 AWG wire, rated ≥ 80 °C; M12 QD connector: per IEC 61076-2-101, must have threaded M12 × 1 retaining nut.

Certifications

Banner Engineering BV
Park Lane, Culliganlaan 2F bus 3
1831 Diegem, BELGIUM

IEC IECEx FMG 14.0029X
ATEX FM12ATEX0094X
FM20US0068X CoC 0003046293 (US)
FM20CA0032X CoC 0003046293C (CAN)
CCC 2020012315326173

Design Standards	
ATEX (European)	EN IEC 60079-0, EN 60079-11
Canada	CAN/CSA C22.2: No.0-M91, No.142-M1987, No.157-92, No.213-M1987, No.1010.1, E60079-0 and E60079-11
United States	FM Class 3600, 3610, and 3810; ANSI/ISA 61010-1 (82.02.01), 60079-0 and 60079-11
IECEx	IEC 60079-0, IEC 60079-11

Approvals	
Q45AD9(a)(b), Q459E(b)	a = Sensing mode D, DL, F, FP, FV, LV, LP, CV, CV4 or R. b = Connection method Q or blank
ATEX (European)	II 1 G Ex ia IIC T5 Ga Ta = -40°C to 70°C - 38343; Entity Entity Parameters: U_i = 15 V DC, I_i = 60 mA, P_i = 225 mW, C_i = 0.3 µF, L_i = 0 mH.
Canadian	IS / I,II,III / 1 / ABCDEFG / T5 Ta = -40°C to 70°C - 38343; Entity I / 0 / Ex ia / IIC / T5 Ta = -40°C to 70° C - 38343; Entity (Non-incendive) NI / I / 2 / ABCD / T5 Ta = -40°C to 70°C Entity Parameters: V_{Max} = 15 V DC, I_{Max} = 60 mA, P_i = 225 mW, C_i = 0.3 µF, L_i = 0 mH
United States	IS / I,II,III / 1 / ABCDEFG / T5 Ta = -40°C to 70°C - 38343; Entity I / 0 / AEx ia / IIC / T5 / Ga Ta = -40°C to 70°C - 38343; Entity (Non-incendive) NI / I / 2 / ABCD / T5 Ta = -40°C to 70°C S / II,III / 2 / FG* / T5 Ta = -40°C to 70°C *Class II and III, Division 2 applies only to model numbers ending in a Q suffix. Entity Parameters: V_{Max} = 15 V DC, I_{Max} = 60 mA, P_i = 225 mW, C_i = 0.3 µF, L_i = 0 mH
IECEx	Ex ia IIC T5 Ga Ta = -40 °C to +70 °C - 35331; Entity Entity Parameters: U_i = 15 V DC, I_i = 60 mA, P_i = 225 mW, C_i = 0.3 µF, L_i = 0 mH

© Banner Engineering Corp. All rights reserved.
www.bannerengineering.com

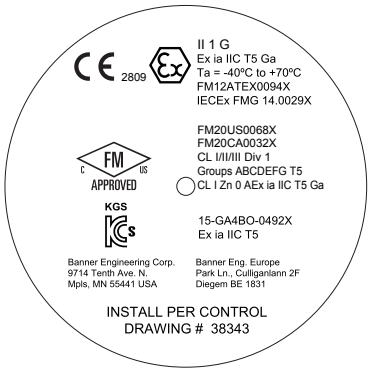

Performance Curves

Opposed mode sensors

Excess Gain	Beam Pattern
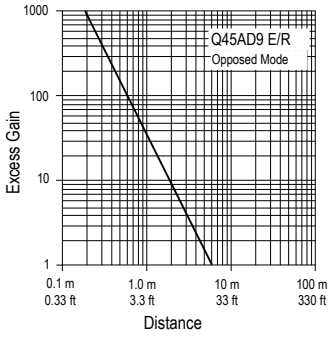	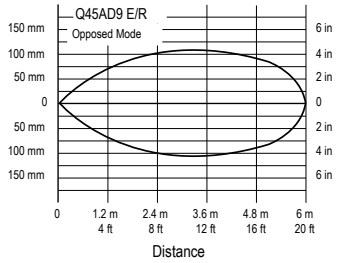

Retroreflective mode sensors

Retroreflective Non-Polarized		Retroreflective Polarized	
Excess Gain	Beam Pattern	Excess Gain	Beam Pattern
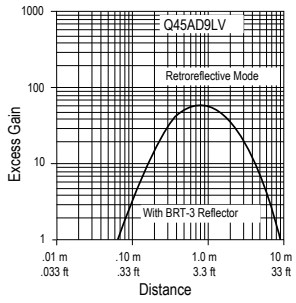	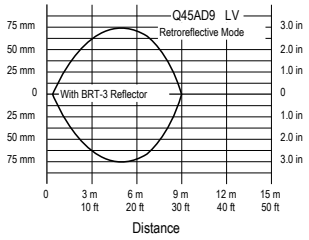	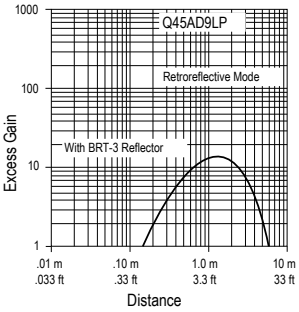	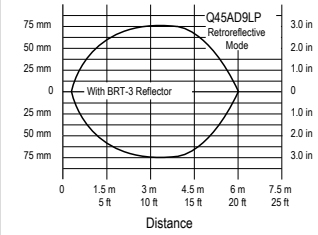

© Banner Engineering Corp. All rights reserved.
www.bannerengineering.com

Diffuse mode sensors

Diffuse Short Range		Diffuse Long Range	
Excess Gain	**Beam Pattern**	**Excess Gain**	**Beam Pattern**
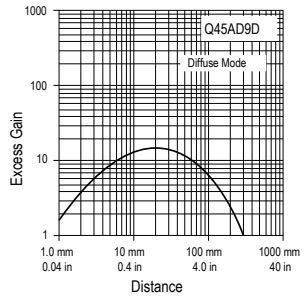	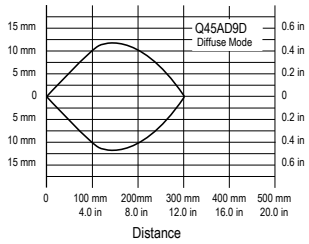	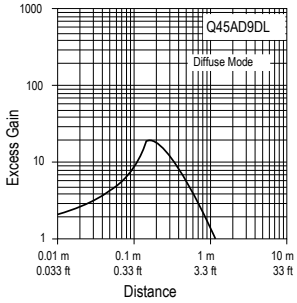	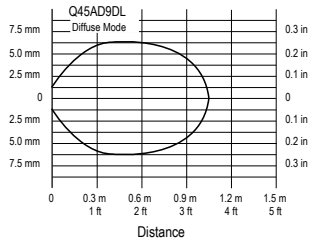

Convergent mode sensors

Convergent (CV and CVQ Models)		Convergent (CV4 and CV4Q Models)	
Excess Gain	**Beam Pattern**	**Excess Gain**	**Beam Pattern**
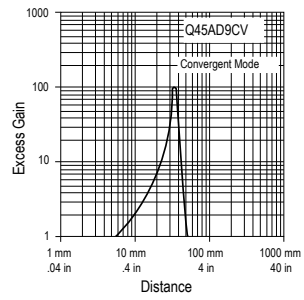	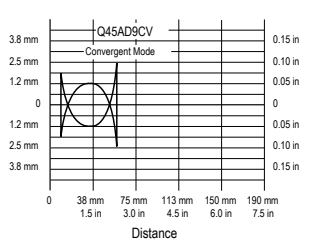	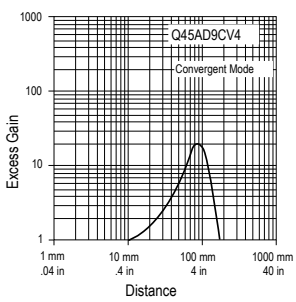	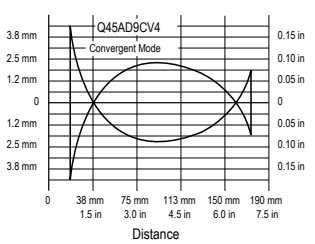

Plastic fiber optic sensors

Plastic Fiber Optic (Opposed Mode)		Plastic Fiber Optic (Diffuse Mode)	
Excess Gain	**Beam Pattern**	**Excess Gain**	**Beam Pattern**
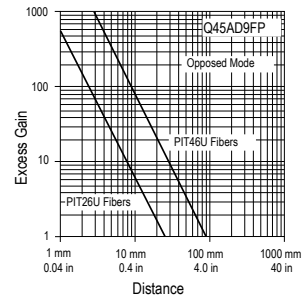	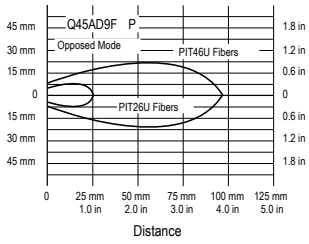	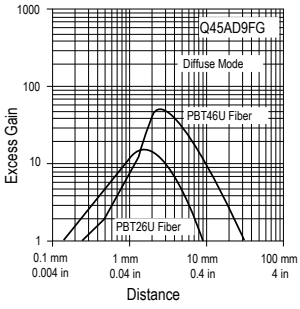	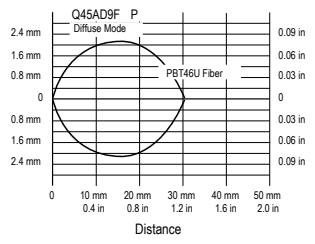

© Banner Engineering Corp. All rights reserved.
www.bannerengineering.com

Glass fiber optic sensors

Glass Fiber Optic, Infrared (Opposed Mode)

Excess Gain

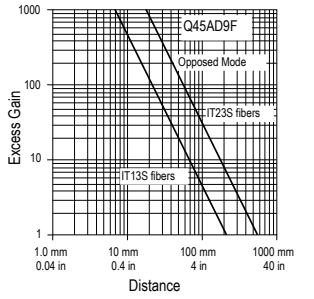

Beam Pattern

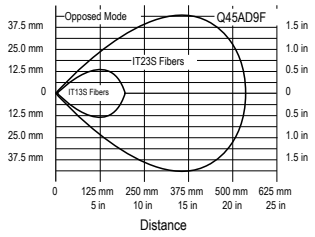

Glass Fiber Optic, Infrared (Diffuse Mode)

Excess Gain

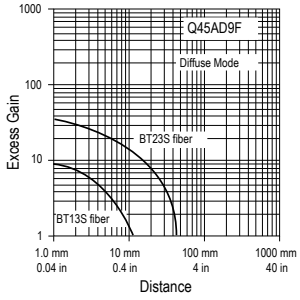

Beam Pattern

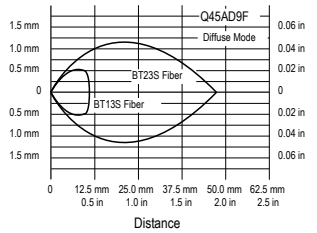

Glass Fiber Optic, Visible Red (Opposed Mode)

Excess Gain

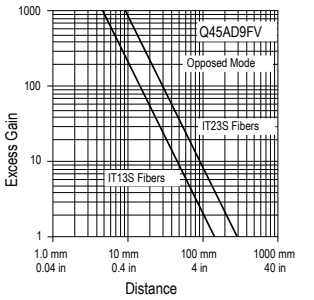

Beam Pattern

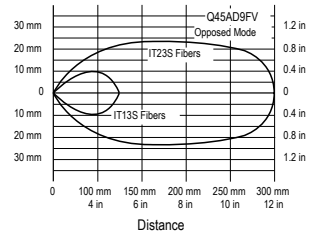

Glass Fiber Optic, Visible Red (Diffuse Mode)

Excess Gain

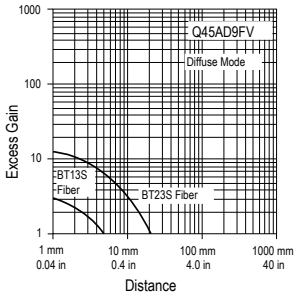

Beam Pattern

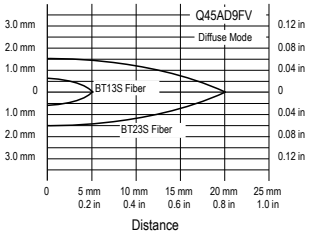

Dimensions

NAMUR Series Opposed, Retro, and Diffuse Sensing Modes (Model Suffix E, R, D, DL, LP, and LV)

Cabled Models

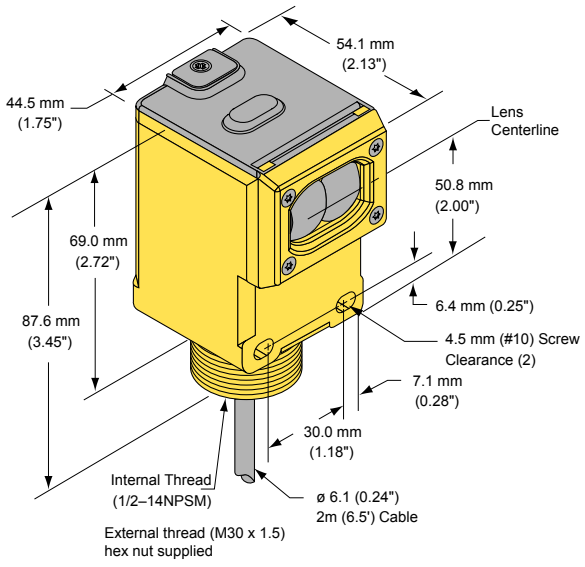

Quick-Disconnect 4-pin M12 Models

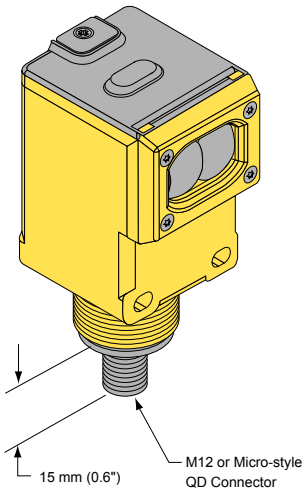

© Banner Engineering Corp. All rights reserved.
www.bannerengineering.com

Other models

Convergent Sensor Models (CV and CV4)	Glass Fiber Optic Models (F and FV)	Plastic Fiber Optic Models (FP)
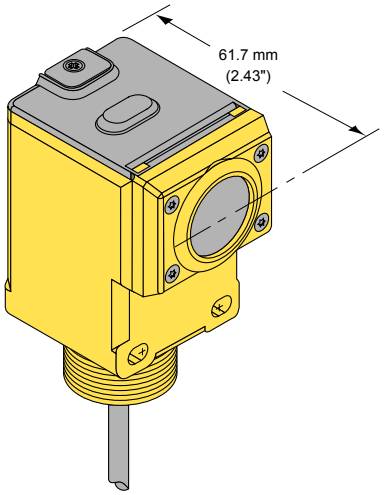	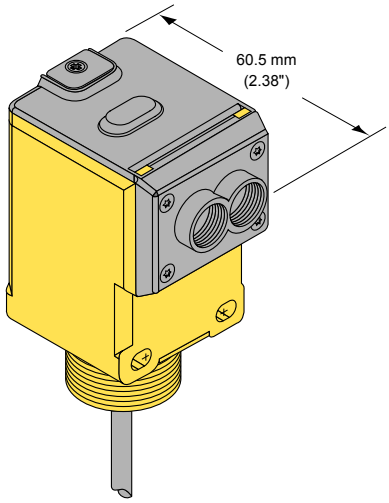	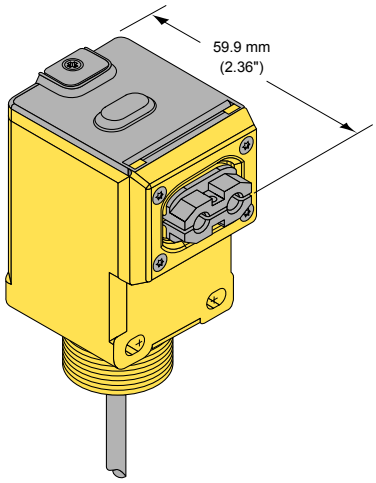

Accessories

Quick-Disconnect (QD) Cables

4-Pin Single-Ended M12 Female Cordsets (for use with NAMUR sensors)					
Model	**Length**	**Style**	**Dimensions**	**Pinout (Female)**	
MQD9-406	2 m (6.56 ft)	Straight	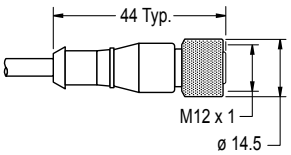	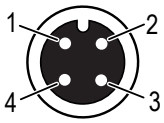	1 = Brown 2 = Blue
MQD9-415	5 m (16.4 ft)				
MQD9-430	9 m (29.5 ft)				
MQD9-406RA	2 m (6.56 ft)	Right-Angle	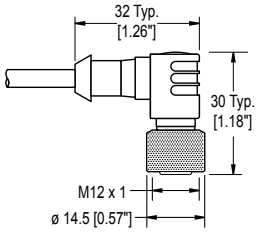	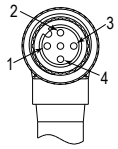	
MQD9-415RA	5 m (16.4 ft)				
MQD9-430RA	9 m (29.5 ft)				

Q45AD9 Replacement Lenses

Replacement Lens Assemblies	
Models	**Description**
UC-45L	Replacement lens for E, R, DL and LV models
UC-45LP	Replacement lens for LP
UC-45D	Replacement lens for D
UC-45F	Replacement lens for F and FV
UC-45FP	Replacement lens for FP
UC-45C	Replacement lens for CV
UC-45C4	Replacement lens for CV4

Continued on page 10

© Banner Engineering Corp. All rights reserved.
www.bannerengineering.com

Continued from page 9

Replacement Lens Assemblies	
Models	**Description**
Q45 Series lens assemblies are field-replaceable.	

Q45AD9 Brackets

SMB30C
- 30 mm split clamp, black PBT bracket
- Stainless steel mounting hardware included
- Mounting hole for 30 mm sensor
- CAD Files: DXF, PDF, IGS, STP

Hole center spacing: A=ø 45
Hole size: B=ø 27.2

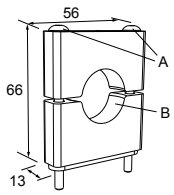

SMB30SC
- Swivel bracket with 30 mm mounting hole for sensor
- Black reinforced thermoplastic polyester
- Stainless steel mounting and swivel locking hardware included
- CAD Files: DXF, PDF, IGS, STP

Hole center spacing: A=ø 50.8
Hole size: A=ø 7.0, B=ø 30.0

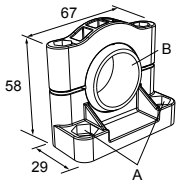

SMB30MM
- 12-gauge stainless steel bracket with curved mounting slots for versatile orientation
- Clearance for M6 (¼ in) hardware
- Mounting hole for 30 mm sensor
- CAD Files: DXF, PDF, IGS, STP

Hole center spacing: A=51, A to B=25.4
Hole size: A=42.6 × 7, B=ø 6.4, C=ø 30.1

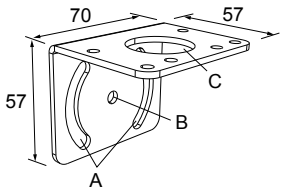

SMB30UR
- 2-piece universal swivel bracket for limit-switch style sensors
- 300 series stainless steel
- Stainless steel swivel locking hardware included
- CAD Files: DXF, PDF, IGS, STP

Hole center spacing: A to B=31.8, B to C=19.0, A to C=50.8, D=50.8
Hole size: C=6.9 × 32, D=73.0 × 6.9

Repairs, Translations, and Replacement Parts

English

Do not attempt any repairs to this Banner device, other than replacing the component(s) listed in this document with original Banner replacement components.

See "Q45AD9 Replacement Lenses" on page 9 for a list of replaceable components.

Other than these components, this Banner device contains no field-replaceable components. For other problems, contact Banner Engineering for troubleshooting of this device. If the device is determined to be defective by a Banner Applications Engineer, they will advise you of Banner's RMA (Return Merchandise Authorization) procedure.

```
IMPORTANT: If instructed to return the device, pack it with care. Damage that occurs in return shipping is
not covered by warranty.
```

Obtain assistance with product repairs by contacting your local Banner Engineering Corp distributor or by calling Banner directly at (763) 544-3164. Access literature translated into your native language on the Banner website at www.bannerengineering.com or contact Banner directly at (763) 544-3164.

© Banner Engineering Corp. All rights reserved.
www.bannerengineering.com

Deutsch

Versuchen Sie nicht, dieses Banner-Gerät zu reparieren, es sei denn, Sie ersetzen die in diesem Dokument aufgeführten Komponenten durch Originalersatzkomponenten von Banner.

Siehe "Q45AD9 Replacement Lenses" on page 9 mit einer Liste der Ersatzkomponenten.

Abgesehen von diesen Komponenten enthält dieses Banner-Gerät keine vor Ort austauschbaren Komponenten. Wenden Sie sich bei anderen Störungen zur Fehlerbehebung dieses Geräts an Banner Engineering. Wenn ein Banner-Anwendungstechniker zu dem Schluss kommt, dass dieses Gerät defekt ist, erhalten Sie von dem Techniker Erläuterungen zum RMA-Verfahren (Return Merchandise Authorization) von Banner für die Warenrückgabe.

WICHTIG: Wenn Sie der Techniker anweist, das Gerät zurückzusenden, verpacken Sie es bitte sorgfältig. Transportschäden bei der Rücksendung werden von der Garantie nicht abgedeckt.

Unterstützung bei Produktreparaturen erhalten Sie von Ihrem örtlichen Banner Engineering Corp Händler oder direkt von Banner unter Tel. (763) 544-3164. Die in Ihre Muttersprache übersetzte Literatur finden Sie auf der Banner-Website unter www.bannerengineering.com oder kontaktieren Sie Banner direkt unter Tel. (763) 544-3164.

Français

Aucune réparation ne doit être effectuée sur ce dispositif, à l'exception du remplacement du/des composant(s) répertorié(s) dans ce document par des pièces de rechange Banner d'origine.

Voir "Q45AD9 Replacement Lenses" on page 9 pour obtenir la liste des composants remplaçables.

À l'exception de ces composants, ce dispositif Banner ne contient aucune pièce qui puisse être remplacée sur place. Si vous rencontrez un autre problème, contactez Banner Engineering pour le dépannage du dispositif. Si un ingénieur d'applications Banner détermine que le dispositif est défectueux, il vous indiquera la procédure à suivre pour le retour des produits (RMA).

Important : Si vous devez retourner le dispositif, emballez-le avec soin. Les dégâts occasionnés pendant le transport de retour ne sont pas couverts par la garantie.

Pour vous aider lors de la réparation de produits, contactez votre distributeur Banner local our appelez directement Banner au (763) 544-3164. La documentation traduite dans votre langue est disponible sur le site internet de Banner www.bannerengineering.com ou contactez directement Banner au (763) 544-3164.

Italiano

Non tentare di riparare questo dispositivo Banner autonomamente, se non sostituendo i componenti indicati nel presente documento con componenti di ricambio originali Banner.

Per un elenco dei componenti che è possibile sostituire, vedere "Q45AD9 Replacement Lenses" on page 9.

Ad eccezione di tali componenti, questo dispositivo Banner non contiene altri componenti sostituibili sul campo. Nel caso in cui si riscontrino problemi di altro tipo, si prega di contattare Banner Engineering per richiedere assistenza. Se il dispositivo viene riscontrato difettoso da un tecnico Banner, il nostro personale vi comunicherà la procedura da seguire per ottenere l'autorizzazione al reso (RMA).

Importante: Se si ricevono istruzioni di rispedire il dispositivo al produttore, imballarlo con cura. I danni dovuti al trasporto non sono coperti dalla garanzia.

Per assistenza nelle riparazioni dei prodotti, contattare il distributore locale Banner Engineering Corp o contattare direttamente Banner al numero (763) 544-3164. È possibile accedere alla documentazione tradotta nella propria lingua madre sul sito Web Banner all'indirizzo www.bannerengineering.com o contattare direttamente Banner al numero (763) 544-3164.

Español

No intente realizar ninguna reparación en este dispositivo Banner, salvo reemplazar los componentes mencionados en este documento por componentes de repuesto originales de Banner.

Consulte "Q45AD9 Replacement Lenses" on page 9 para obtener una lista de componentes que se pueden reemplazar.

Aparte de estos componentes, este dispositivo Banner no contiene componentes reemplazables en campo. Para otras situaciones, comuníquese con Banner Engineering para solucionar los problemas de este dispositivo. Si algún ingeniero de Aplicaciones de Banner determina que el dispositivo está defectuoso se le informará el procedimiento RMA (Autorización de Devolución de Mercancía) de Banner.

Importante: Si se le solicita devolver el dispositivo, empáquelo con cuidado. Puede haber daños durante el envío de devolución que no estén cubiertos por la garantía.

Para reparaciones de productos, por favor contacte a su distribuidor local de Banner Engineering o llame a Banner directamente al 00 1 (763) 544-3164. Vea la literatura traducida en su idioma en el sitio web Banner en www.bannerengineering.com o comuníquese con Banner directamente al 00 1 (763) 544-3164.

中国人

除使用邦纳原厂备件替换本文中列出的组件外，请勿对该邦纳装置进行任何维修操作。

有关可更换组件的列表，请参见 "Q45AD9 Replacement Lenses" on page 9。

除这些组件外，该邦纳装置不包含任何可现场更换的组件。对于其他问题，请联系邦纳以获取该装置的故障排查信息。如果装置经邦纳应用工程师认定为有缺陷，他们会告知您邦纳的 RMA（退货授权）程序。

重要注意事项： 如被要求退回装置，请妥善包装后寄回。退货运输过程中发生的损坏不在保修范围内。

请联系当地的 Banner Engineering Corp 经销商或直接致电 Banner +1 (763) 544-3164，以获得产品维修帮助。请访问邦纳网站 www.bannerengineering.com 或直接拨打 +1 (763) 544-3164 联系邦纳，获取翻译成您母语的资料。

© Banner Engineering Corp. All rights reserved.
www.bannerengineering.com

한국인

이 문서에 나열된 구성부품을 정품 Banner 교체용 구성부품으로 교체하는 것 외에는 이 Banner 장치를 수리하려고 시도하지 마십시오.

교체 가능한 구성부품 목록은 "Q45AD9 Replacement Lenses" on page 9를 참조하십시오.

이 Banner 장치에는 해당 구성부품 이외에 현장에서 교체할 수 있는 구성부품이 없습니다. 다른 문제는 Banner Engineering에 연락하여 해당 장치의 문제 해결을 문의하십시오. Banner 애플리케이션 엔지니어가 장치에 결함이 있는 것으로 판정하면, Banner의 RMA(제품 반품 승인)절차에 대해 안내해 드립니다.

중요: 제품을 반송하도록 안내 받으셨다면 잘 포장해주십시오. 반송 도중에 발생한 손상은 보증 서비스가 적용되지 않습니다.

제품 수리에 대한 지원은 지역 Banner Engineering Corp 대리점에 문의하거나 Banner에 직접 (763) 544-3164로 문의하실 수 있습니다. 사용자의 모국어로 번역된 자료는 Banner 웹사이트 www.bannerengineering.com에서 액세스하거나 Banner에 직접 (763) 544-3164로 문의하실 수 있습니다.

日本語

このバナー装置の修理は、本書に記載されているコンポーネントをバナー純正の交換用コンポーネントに交換する以外、行わないでください。

交換可能な部品のリストについては、"Q45AD9 Replacement Lenses" on page 9をご覧ください。

このバナー装置に対応する現場で交換可能な部品は、これらの部品以外にありません。その他の問題については、本装置のトラブルシューティングについてバナーエンジニアリングにお問い合わせください。バナーのアプリケーションエンジニアが装置に欠陥があると判断した場合、バナーのRMA（返品承認）手続きについてお知らせします。

重要 ： 返品を指示された場合は、装置を丁寧に梱包してください。返品時に発生した破損は保証の対象外となります。

製品の修理については、最寄りのBanner Engineering Corp代理店にお問い合わせいただくか、米国+1 (763) 544-3164まで直接お電話でお問い合わせください。バナーのウェブサイト（www.bannerengineering.com）でお客様の言語に翻訳された資料にアクセスするか、米国+1 (763) 544-3164まで直接お電話でお問い合わせください。

čeština

Nepokoušejte se provádět žádné opravy tohoto zařízení Banner, kromě výměny součástí uvedených v tomto dokumentu za originální náhradní součásti Banner.

Seznam vyměnitelných součástí naleznete v části "Q45AD9 Replacement Lenses" on page 9.

Kromě těchto součástí neobsahuje toto zařízení Banner žádné součásti vyměnitelné v provozních podmínkách. V případě potřeby řešení problémů se zařízením kontaktujte společnost Banner Engineering. Pokud je zařízení vyhodnoceno technikem společnosti Banner jako poškozené, bude vám doporučen postup reklamace RMA společnosti Banner.

Důležité: Pokud byl vydán požadavek na vrácení zařízení, pečlivě ho zabalte. Poškození vzniklé při dopravě není považováno za záruční opravu.

Pokud produkt potřebuje opravu, vyžádejte si pomoc od místního distributora společnosti Banner Engineering Corp nebo přímo na telefonním čísle (763) 544-3164. Dokumentaci přeloženou do vašeho jazyka si vyhledejte na webových stránkách společnosti Banner na adrese www.bannerengineering.com nebo se obraťte přímo na společnost Banner na telefonním čísle (763) 544-3164.

Polski

Nie należy podejmować żadnych prób naprawy urządzenia Banner poza wymianą elementów wymienionych w niniejszym dokumencie na oryginalne elementy zamienne Banner.

Zobacz "Q45AD9 Replacement Lenses" on page 9, aby zapoznać się z listą wymiennych elementów.

Poza tymi elementami urządzenie Banner nie zawiera żadnych elementów, które można wymieniać samodzielnie. W celu rozwiązania problemów z urządzeniem należy skontaktować się z działem technicznym firmy Banner Engineering. Jeśli urządzenie zostanie uznane za wadliwe przez inżyniera technicznego Banner, poinformuje on użytkownika o firmowej procedurze zwrotu towaru (RMA) w firmie Banner.

Ważne: Jeśli urządzenie ma zostać zwrócone, należy je starannie zapakować. Uszkodzenia powstałe podczas odsyłki nie są objęte gwarancją.

Aby uzyskać pomoc w zakresie naprawy produktu, należy skontaktować się z lokalnym dystrybutorem Banner Engineering Corp lub zadzwonić bezpośrednio do firmy Banner pod numer (763) 544-3164. Dostęp do literatury przetłumaczonej na swój język ojczysty można uzyskać na stronie internetowej firmy Banner pod adresem www.bannerengineering.com lub kontaktując się bezpośrednio z firmą Banner pod numerem (763) 544-3164.

Português

Não tente fazer nenhum reparo neste dispositivo Banner, a não ser substituir o(s) componente(s) listado(s) neste documento por componentes de reposição originais da Banner.

Consulte "Q45AD9 Replacement Lenses" on page 9 para obter uma lista de componentes substituíveis.

Além desses componentes, este dispositivo Banner não contém componentes substituíveis em campo. Para outros problemas, entre em contato com a Banner Engineering para solucionar o problema deste dispositivo. Se um engenheiro de aplicações da Banner determinar que o dispositivo está com defeito, ele o informará sobre o procedimento de RMA (Return Merchandise Authorization) da Banner.

Importante: Se for instruído a devolver o dispositivo, embale-o com cuidado. Os danos ocorridos no transporte de devolução não são cobertos pela garantia.

Obtenha assistência para reparos do produto entrando em contato com o distribuidor local da Banner Engineering Corp ou ligando diretamente para a Banner no telefone (763) 544-3164. Acesse a literatura traduzida para seu idioma nativo no site da Banner em www.bannerengineering.com ou entre em contato diretamente com a Banner pelo telefone (763) 544-3164.

© Banner Engineering Corp. All rights reserved.
www.bannerengineering.com

Türkçe

Bu belgede listelenen bileşen(ler)in orijinal Banner yedek bileşenleri ile değiştirilmesi dışında bu Banner cihazında onarım yapmaya çalışmayın.

Değiştirilebilir bileşenlerin listesi için "Q45AD9 Replacement Lenses" on page 9 bölümüne bakın.

Bu Banner cihazı listelenen bileşenler dışında sahada değiştirilebilecek hiçbir bileşen içermez. Diğer sorunlarda cihazda sorun giderme işlemleri için Banner Engineering ile iletişime geçin. Bir Banner Uygulama Mühendisi tarafından cihazın kusurlu olduğu tespit edilirse, Banner RMA (İade Mal Yetkilendirme) prosedürü hakkında bilgilendirilirsiniz.

ÖNEMLİ: İade etmeniz istenirse, cihazı dikkatli bir şekilde paketleyin. İade nakliyesinde meydana gelecek hasarlar garanti kapsamında değildir.

Yerel Banner Engineering Corp distribütörünüzle iletişime geçerek veya doğrudan (763) 544-3164 numaralı telefondan Banner'ı arayarak ürün onarımlarıyla ilgili yardım alın. Ana dilinize çevrilmiş dokümanlara www.bannerengineering.com adresindeki Banner web sitesinden erişebilir veya (763) 544-3164 numaralı telefondan doğrudan Banner ile iletişime geçebilirsiniz.

Banner Engineering Corp Limited Warranty

Banner Engineering Corp. warrants its products to be free from defects in material and workmanship for one year following the date of shipment. Banner Engineering Corp. will repair or replace, free of charge, any product of its manufacture which, at the time it is returned to the factory, is found to have been defective during the warranty period. This warranty does not cover damage or liability for misuse, abuse, or the improper application or installation of the Banner product.

THIS LIMITED WARRANTY IS EXCLUSIVE AND IN LIEU OF ALL OTHER WARRANTIES WHETHER EXPRESS OR IMPLIED (INCLUDING, WITHOUT LIMITATION, ANY WARRANTY OF MERCHANTABILITY OR FITNESS FOR A PARTICULAR PURPOSE), AND WHETHER ARISING UNDER COURSE OF PERFORMANCE, COURSE OF DEALING OR TRADE USAGE.

This Warranty is exclusive and limited to repair or, at the discretion of Banner Engineering Corp., replacement. **IN NO EVENT SHALL BANNER ENGINEERING CORP. BE LIABLE TO BUYER OR ANY OTHER PERSON OR ENTITY FOR ANY EXTRA COSTS, EXPENSES, LOSSES, LOSS OF PROFITS, OR ANY INCIDENTAL, CONSEQUENTIAL OR SPECIAL DAMAGES RESULTING FROM ANY PRODUCT DEFECT OR FROM THE USE OR INABILITY TO USE THE PRODUCT, WHETHER ARISING IN CONTRACT OR WARRANTY, STATUTE, TORT, STRICT LIABILITY, NEGLIGENCE, OR OTHERWISE.**

Banner Engineering Corp. reserves the right to change, modify or improve the design of the product without assuming any obligations or liabilities relating to any product previously manufactured by Banner Engineering Corp. Any misuse, abuse, or improper application or installation of this product or use of the product for personal protection applications when the product is identified as not intended for such purposes will void the product warranty. Any modifications to this product without prior express approval by Banner Engineering Corp will void the product warranties. All specifications published in this document are subject to change; Banner reserves the right to modify product specifications or update documentation at any time. Specifications and product information in English supersede that which is provided in any other language. For the most recent version of any documentation, refer to: www.bannerengineering.com.

For patent information, see www.bannerengineering.com/patents.

© Banner Engineering Corp. All rights reserved.
www.bannerengineering.com