MODEL NO.	"L"	P/N
PIT433U	10058 [396]	70777
PIT43U	1000 [39]	48006
PIT4100U	30480 [1200]	70778
PIT475U	22860 [900]	40400
PIT460U	18288 [720]	27280
PIT430U	9144 [360]	27149
PIT420U	6096 [240]	27555
PIT415U	4572 [180]	27148
PIT410U	3048 [120]	27556
PIT46U	2000 [79]	26034

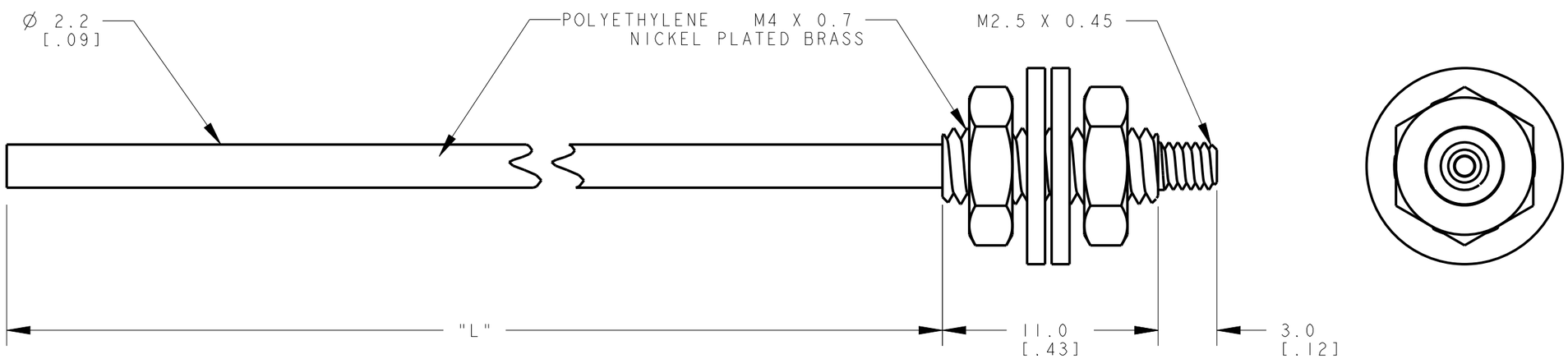

NOTES:
1. ALL DIMENSIONS ARE MILLIMETERS [INCHES] UNLESS OTHERWISE NOTED.
2. REFER TO "www.bannerengineering.com" FOR ADDITIONAL DATA AND SPECIFICATIONS.

B	RE-DRAWN IN SOLIDWORKS	4-26-02 G. GIBBONS
A	SMALL THREAD WAS LISTED AS M2 X 0.45	8-23-95 GRK

This drawing is the property of BANNER ENGINEERING CORP. Any use or reproduction, in any form, without prior written permission of Banner is prohibited.
© Banner Engineering Corp.

THIRD ANGLE PROJECTION

BANNER ENGINEERING CORP.
www.bannerengineering.com

TITLE

PIT4 SERIES UNTERMINATED

SIZE	DRAWING NO.	REV.
B	161890	A
SCALE 4:1	SHEET 1 OF 1	

CREO

ПРОМЭЛЕКТРОНИКА/ sales@prom-elec.com