MODEL NO.	"L"	"SL"	"MTL"	P/N
PIA46UHFMBMP	2000 [79]	356 [14]	PLASTIC	51822
PIA46UHFMBMSS	2000 [79]	356 [14]	STAINLESS STEEL	94207

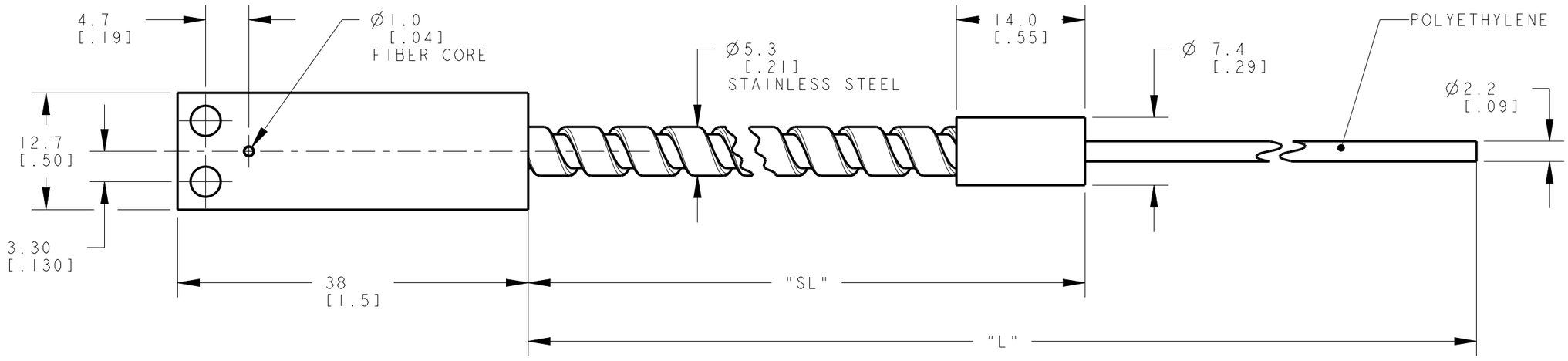

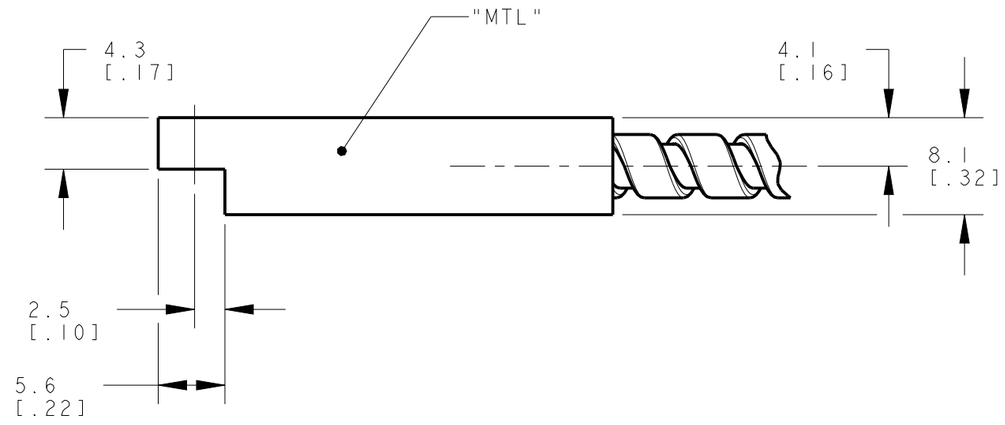

NOTES:
1. ALL DIMENSIONS ARE MILLIMETERS [INCHES] UNLESS OTHERWISE NOTED.
2. REFER TO "www.bannerengineering.com" FOR ADDITIONAL DATA AND SPECIFICATIONS.

This drawing is the property of BANNER ENGINEERING CORP. Any use or reproduction, in any form, without prior written permission of Banner is prohibited.
© 2015 Banner Engineering Corp.

THIRD ANGLE PROJECTION

BANNER ENGINEERING CORP.
www.bannerengineering.com

TITLE
PIA4 HIGH FLEX UNTERMINATED

SIZE	DRAWING NO.	REV.
B	193386	2
SCALE 2:1	SHEET 1 OF 1	

CREO

ПРОМЭЛЕКТРОНИКА/ sales@prom-elec.com